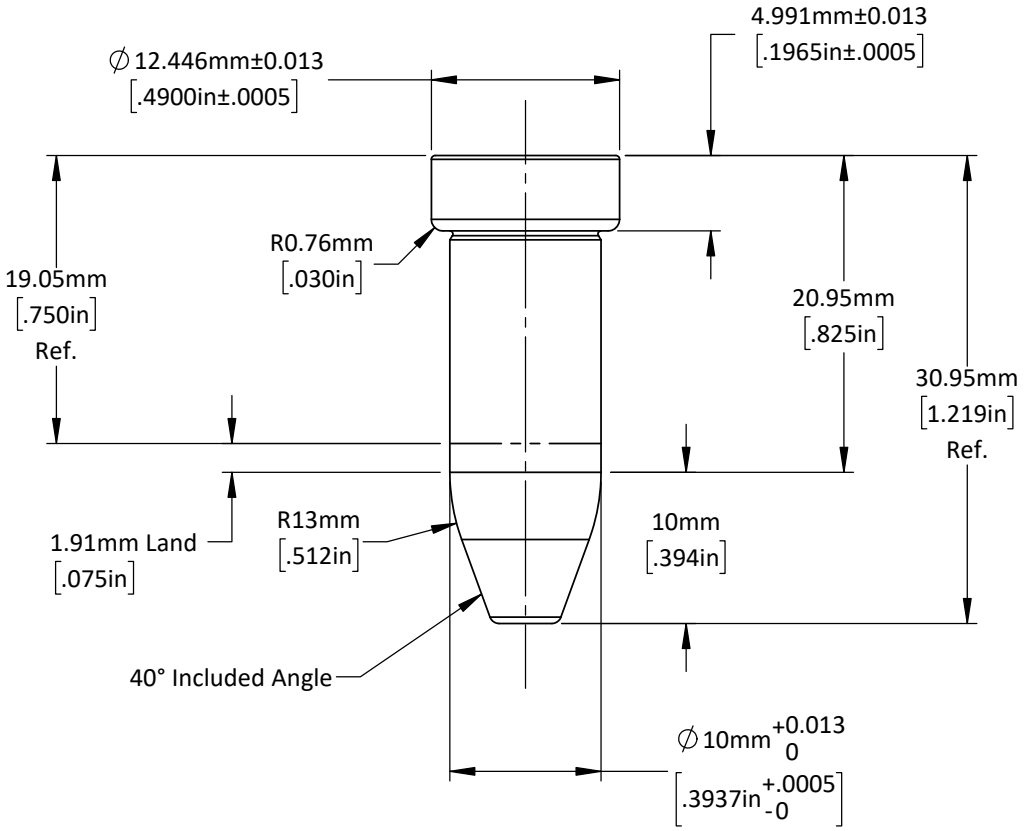

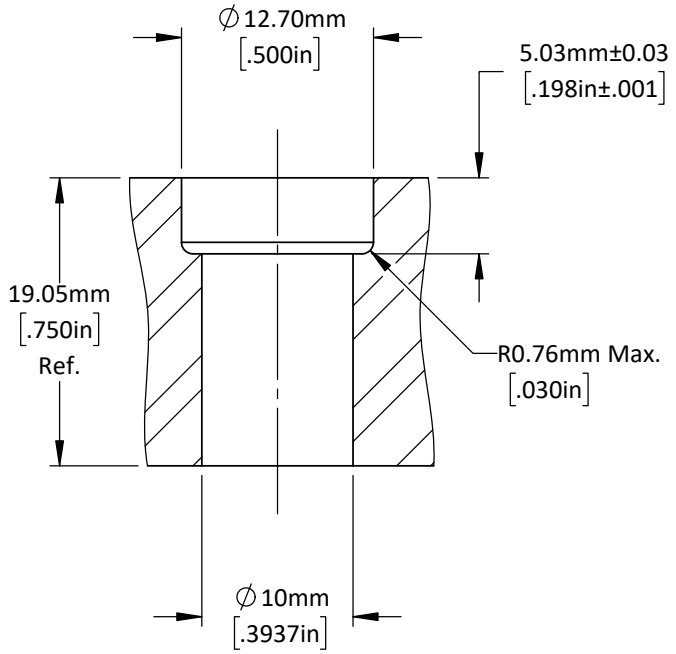

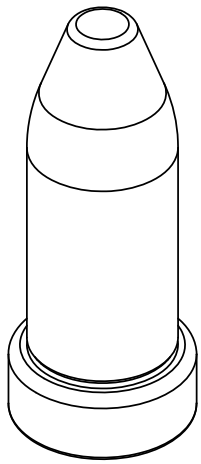

DO NOT SCALE DRAWING	REV 1	**Pilot-P-10mm-1.9mm-.750**
This product may be covered by one or more patents or patent applications. See http://www.standardlifters.com/patents.html for details.		STANDARD LIFTERS INC